Compressive Estimation of Near Field Channels for Ultra Massive-MIMO Wideband THz Systems

جامعة الملك عبدالله للعلوم والتقنية
King Abdullah University of Science and Technology

Simon Tarboush* Anum Ali† Tareq Y. Al-Naffouri‡

THz & UM-MIMO for 6G

- THz can satisfy the Tbps throughput requirement [1]
- THz channels are dominated by the line-of-sight (LoS) component in many scenarios, hence extremely sparse [2]
- Ultra Massive multiple-input multiple-output (UM-MIMO) antenna arrays are necessary to get high beamforming gain [1]
- Short wavelength, large arrays, and limited communication distance implies that the communication is near-field where the spherical wave model (SWM) is appropriate [3]
- Hybrid spherical-planar wave model (HSPM) is less complex than the SWM but has comparable accuracy [2] [4]

Contributions

- A dictionary reduction (DR) based compressed sensing (CS) method for HSPM to exploit the geometric structure and spatial information extracted from the estimates of the first subarray (SA) in channel estimation of subsequent SAs

System and Channel Model

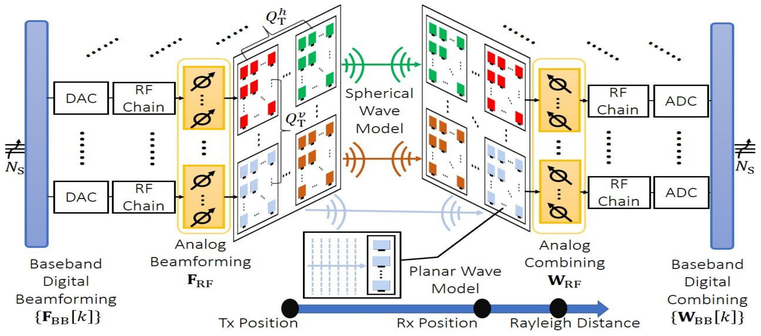

- Employ a wideband channel and system model with array-of-subarrays (AoSA) architecture respecting hardware constraints
- Total UM-MIMO system dimension is $Q_{\mathrm{R}}\bar{Q}_{\mathrm{R}} \times Q_{\mathrm{T}}\bar{Q}_{\mathrm{T}}$, Tx contains Q_{T} SAs, and every Tx SA is composed of $\bar{Q}_{\mathrm{T}}$ tightly-packed AEs
- MIMO channel between Rx SA q_{R} and Tx SA q_{T} at subcarrier k

$$\mathbf{H}_{q_{\mathrm{R}},q_{\mathrm{T}}}[k] = \sqrt{\frac{\bar{Q}_{\mathrm{R}}\bar{Q}_{\mathrm{T}}}{L}} \sum_{\ell=1}^{L} \alpha_\ell(f_k, d_{q_{\mathrm{R}},q_{\mathrm{T}}}) \mathbf{a}_{\mathrm{R}}\left(\mathbf{\Phi}_{q_{\mathrm{T}},q_{\mathrm{R}},\ell}\right) \mathbf{a}_{\mathrm{T}}^{\mathrm{T}}\left(\mathbf{\Phi}_{q_{\mathrm{R}},q_{\mathrm{T}},\ell}\right) e^{-j2\pi\frac{kB_{\mathrm{sys}}}{K}\tau_\ell}$$

3D distance, AoA, and AoD vary across the SAs

- Channel between different SAs is similar, albeit not identical

Proposed Channel Estimation Strategy

- Proposed strategy consists of two main phases:
  1) Pilot transmission using random beamformers/combiners

$$\mathbf{y}^{q_{\mathrm{R}},q_{\mathrm{T}}}[k] = \sqrt{P_{\mathrm{T}}}\mathbf{\Psi}\bar{\mathbf{\Theta}}\bar{\alpha}_{q_{\mathrm{R}},q_{\mathrm{T}}}[k] + \mathrm{vec}\left(\bar{\mathbf{N}}[k]\right) \quad (1)$$

  - $\mathbf{\Psi} = \left(\mathbf{P}^{\mathrm{T}} \otimes \mathbf{Z}^{\mathrm{H}}\right)$ is the measurement matrix
  - $\bar{\mathbf{\Theta}} = \left(\bar{\mathbf{A}}_{\mathrm{T}} \otimes \bar{\mathbf{A}}_{\mathrm{R}}\right)$ is the quantized dictionary matrix
  - $\bar{\alpha}_{q_{\mathrm{R}},q_{\mathrm{T}}}[k]$ is a sparse vector with only $\bar{L}$ non-zero elements
  2) CS based channel estimation for the first Tx-Rx SA and enhanced CS estimation, using the proposed DR method, for the remaining Rx SAs where the search space is reduced based on the first Tx-Rx SAs estimation

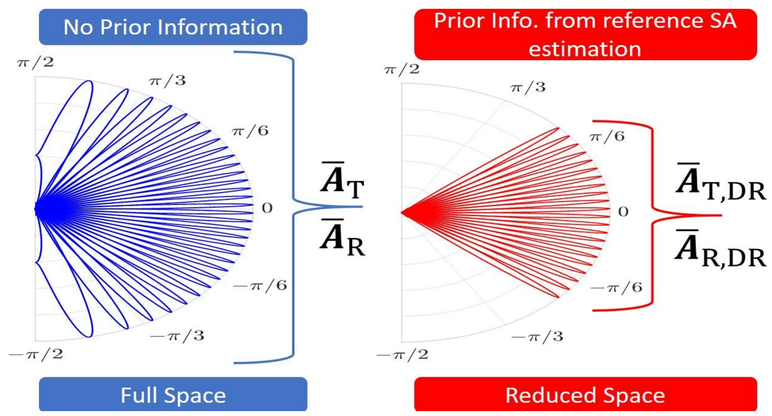

- For a specific Tx SA, DR consists of the following four stages:
  1. Solve the CS problem of (1) for the first Tx-Rx SAs, i.e., using, for example, SOMP/OMP with input signal $\mathbf{y}^{1,1}[k]$
  2. Construct an oversampled - by a factor of G_{OVS} - dictionary $\bar{\mathbf{A}}_{\mathrm{OVS}}$
  3. Retain G_{DR} columns from $\bar{\mathbf{A}}_{\mathrm{OVS}}$ that correspond to spatial angles centered around the estimated AoD and AoA
  4. For the remaining Rx SAs $(2, \cdots, Q_{\mathrm{R}})$, solve (1) by using the reduced dictionary $\bar{\mathbf{\Theta}}_{\mathrm{DR}} = \left(\bar{\mathbf{A}}_{\mathrm{T,DR}} \otimes \bar{\mathbf{A}}_{\mathrm{R,DR}}\right)$
- DR-based estimation is repeated for all Tx SAs.

Contact Information

* Independent Researcher, Damascus, Syria: simon.w.tarboush@gmail.com
† Samsung Research America, TX, USA: anum.ali@samsung.com
‡ King Abdullah University of Science and Technology, Thuwal, KSA: tareq.alnaffouri@kaust.edu.sa

Results and Discussion

- Simulate a LoS THz channel using TeraMIMO [2] with half-wavelength spacing between adjacent AEs within a SA, and 72 (64) half-wavelength spacing between adjacent Tx (Rx) SAs
- Prposed DR has up to **2 dB** normalized mean square error (NMSE) **improvement** over conventional methods in high SNR
- Both SOMP-DR and OMP-DR achieve **higher effective achievable rate (EAR)** R_{eff} than both OMP and SOMP

Parameter	Value
f_c	0.3 THz
B_{sys}	30 GHz
K	4
$Q_{\mathrm{T}} = Q_{\mathrm{R}}$	2×2 SAs
$\bar{Q}_{\mathrm{T}} = \bar{Q}_{\mathrm{R}}$	8×8 AEs
$G_{\mathrm{T}} = G_{\mathrm{R}}$	16×16
$G_{\mathrm{T,OVS}} = G_{\mathrm{R,OVS}}$	32×32
d	0.15 m
$\bar{L}$	10
$Q_{\mathrm{T}}^{\mathrm{quant}} = Q_{\mathrm{R}}^{\mathrm{quant}}$	2 bits

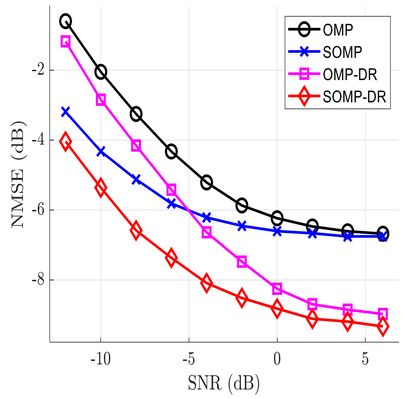

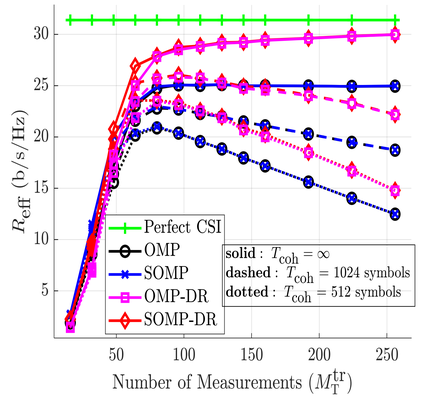

Conclusion

- We proposed a compressive channel estimation strategy for HSPM UM-MIMO THz systems with AoSA architecture
- The proposed strategy outperforms both OMP and SOMP, and achieves (i) a low NMSE, and (ii) EAR close to the perfect channel case

References

[1] H. Sarieddeen, M.-S. Alouini, and T. Y. Al-Naffouri, *"An overview of signal processing techniques for terahertz communications,"* Proc. IEEE, vol. 109, no. 10, pp. 1628–1665, August 2021.
[2] S. Tarboush, H. Sarieddeen, H. Chen, M. H. Loukil, H. Jemaa, M.-S. Alouini, and T. Y. Al-Naffouri, *"TeraMIMO: A channel simulator for wideband ultra-massive MIMO terahertz communications,"* IEEE Trans. Veh. Technol., vol. 70, no. 12, pp. 12 325–12 341, October 2021.
[3] M. Cui, Z. Wu, Y. Lu, X. Wei, and L. Dai, *"Near-field MIMO communications for 6G: Fundamentals, challenges, potentials, and future directions,"* IEEE Commun. Mag., vol. 61, no. 1, pp. 40–46, 2023.
[4] Y. Chen, L. Yan, and C. Han, *"Hybrid spherical and planar-wave modeling and DCNN-powered estimation of terahertz ultra-massive MIMO channels,"* IEEE Trans. Commun., vol. 69, no. 10, pp. 7063–7076, October 2021.